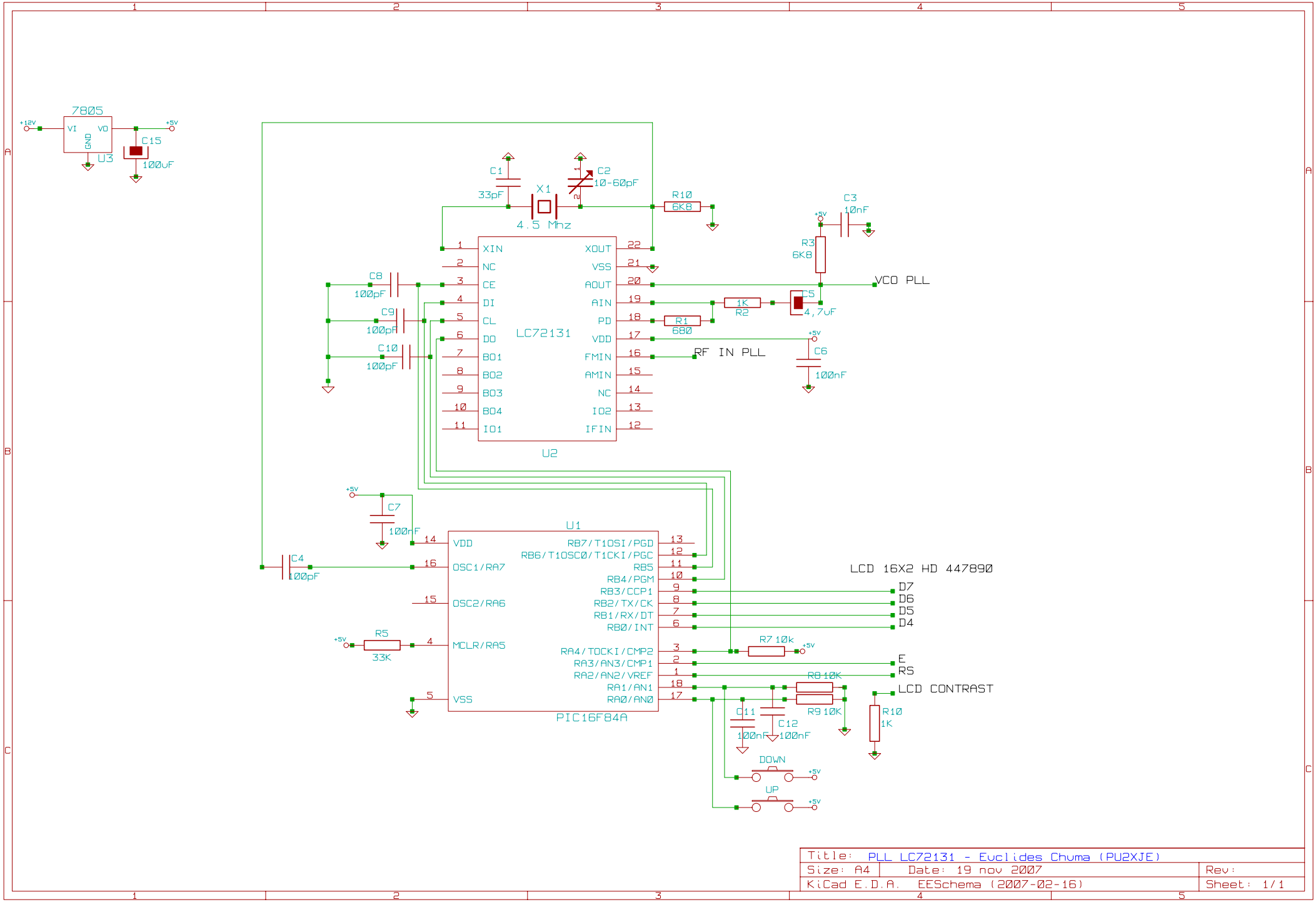

Title: PLL LC72131 - Euclides Chuma (PU2XJE)		
Size: A4	Date: 19 nov 2007	Rev:
KiCad E.D.A. EESchema (2007-02-16)		Sheet: 1/1